1500 SERIES SMALL CAPACITY ULTRA^2 LOW NO_X™ BURNER

CAPABILITIES

- Similar design for hot or cold air
- Good turndown with flame characteristics and direction maintained
- Multiple gaseous fuel capabilities including commercial and many by-product fuels

FEATURES

- Rugged cast unlined construction suitable for air temperature up to 1000°F (537°C)
- Ultra^2 Low NO_X™ cast metal nozzle that provides outstanding flame stability
- Suitable for operation at furnace temperatures up to 2600°F (1427°C)
- Gas fired pilots or direct spark ignition available

CONTROL

- Metered Flow recommended
- Pressure Balanced System is possible

FLAME MONITORING

- U.V. Detector recommended

APPLICATIONS

- Car Type Heat Treat Furnaces
- Forge Furnaces
- Plate Heat Treat Furnaces
- Roller Hearth
- Continuous Strip Lines
- Tundish and Ladle Preheat and Drying Stations
- Tangentially Fired Batch Annealing Furnaces

BURNER IGNITION

- Pilot
- Direct Spark
- Manual

FUEL CAPABILITIES

- Natural Gas
- Coke Oven Gas

OPTION

- Body insulation available

Bloom Engineering's 1500 Series Ultra Low NO_x air staged burners have specific designs that can be used to operate with hot or cold air. The burner uses a refractory baffle, and the small capacity burner uses a metallic nozzle in addition to air staging to obtain low NO_x along with burner stability. The baffle provides a stabilization point in the furnace proper, preventing combustion inside the burner body, and serves to shield the burner parts from furnace radiation.

Manufactured under U.S. Patent 6,685,463

CAUTION: The improper use of combustion equipment can result in a condition hazardous to people and property. Users are urged to comply with National Safety Standards and/or Insurance Underwriters recommendations

© Bloom Engineering Co 2009

1500 SERIES SMALL CAPACITY ULTRA^2 LOW NO$_X$™ BURNER

Air Flow at 20 inches (50 mBar) Water Column

Catalog No. 1500-	Air Flow at 100°F (38°C)		Air Flow at 750°F (399°C)		Flame Size length x diameter	
	SCFH	Nm^3/hr	SCFH	Nm^3/hr	inches	mm
015	2,789	75	1,897	51	33 x 6	800 x 150
020	4,648	126	3,162	85	41 x 6	1000 x 150
025	6,973	188	4,743	128	44 x 6	1100 x 150
030A	9,297	251	6,325	171	51 x 8	1250 x 200
030B	10,782	291	7,335	198	53 x 8	1300 x 200
030C	12,450	336	8,470	229	54 x 10	1350 x 250
030D	13,945	377	9,487	256	54 x 10	1350 x 250
030E*	17,665	477	12,018	325	60 x 11	1500 x 250
040A	18,593	503	12,649	342	60 x 11	1500 x 250
040B	23,242	628	15,811	427	68 x 12	1700 x 300
040E*	28,900	781	19,660	531	72 x 13	1828 x 330
060A	29,400	795	20,000	541	95 x 15	2410 x 380
060B	33,075	894	22,500	608	100 x 15	2540 x 380

*Largest capacity in air connection size. NOx program not applicable.

The Bloom small capacity 1500 Series burner is designed for gaseous fuels and is suitable for gases having a heating value of approximately 500 Btu per cubic foot (4700 Kcal/m³) or greater on all. For designs using a lower heating value, contact your local representative or Bloom Pittsburgh.

The burner is designed for excess air levels in the range of five percent. Nominal capacity ranges from approximately 300,000 to 4 million Btu per hour. For larger inputs use the large capacity 1500 series design. For cold air the burner uses a design air pressure of 20 inches (50 mbar) air and is limited to 20 inches (50 mbar) water column for hot air.

Gas Press Requirement – Natural Gas

Preheated Air – 1.2 psig (80mbar)

Ambient Air – 1.8 psig (120 mbar)

Catalog No. 1500-	Air Connection Size	Pilot Size @ 4" wc	Block Dimensions Square	Optional Direct Spark Igniter*
015	1.5" Threaded	3001-009	12"	3500-150-AA
020	2" Threaded			
025	2.5" Threaded			
030A-030E	3" Threaded	3001-020	14"	
040A-040E	4" Threaded	3001-030	16"	
060A-060B	6" Flanged		18"	

*"AA" is air assisted

CAUTION: The improper use of combustion equipment can result in a condition hazardous to people and property. Users are urged to comply with National Safety Standards and/or Insurance Underwriters recommendations

© Bloom Engineering Co 2009

1500 SERIES SMALL CAPACITY ULTRA^2 LOW NO$_X$™ BURNER

GENERAL DIMENSIONS

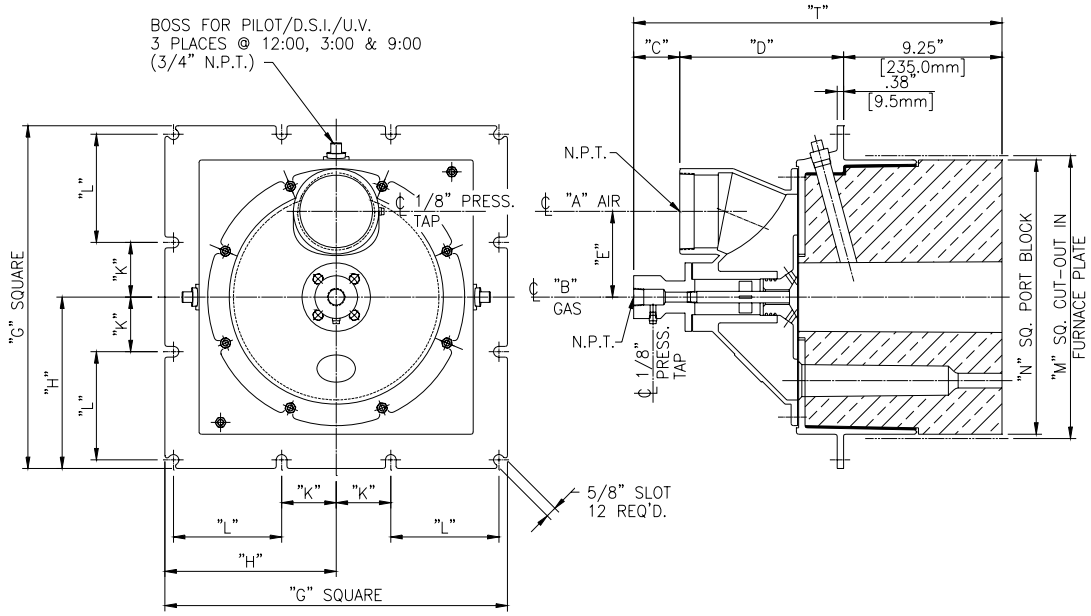

Catalog No. 1500-	Dimensions in Inches (mm)										
	A	B	C	D	E	G	H	K	L	M	N
015	1.5 38	.5 13	3.44 87	8.19 208	4.0 102	16.0 406	8.0 203	2.50 64	5.0 127	12.50 318	12.0 305
020	2 51	.5 13	3.44 87	8.19 208	4.0 102	16.0 406	8.0 203	2.50 64	5.0 127	12.50 318	12.0 305
025	2.5 64	.5 13	3.44 87	8.19 208	4.0 102	16.0 406	8.0 203	2.50 64	5.0 127	12.50 318	12.0 305
030A 030B 030C 030D 030E	3 76	.75 19	3.44 87	8.81 224	4.50 114	18.0 457	9.0 229	2.88 73	5.63 143	14.50 368	14.0 356
040A 040B 040E	4 102	1 25	3.44 87	9.56 243	5.0 127	20.0 508	10.0 254	3.19 81	6.31 160	16.50 419	16.0 406

Manufactured under U.S. Patent 6,685,463

NOTE: GENERAL DIMENSION INFORMATION. SEE BLOOM REPRESENTATIVE FOR CERTIFIED DIMENSIONS FOR CONSTRUCTION.

CAUTION: The improper use of combustion equipment can result in a condition hazardous to people and property. Users are urged to comply with National Safety Standards and/or Insurance Underwriters recommendations

© Bloom Engineering Co 2009

1500 SERIES SMALL CAPACITY ULTRA^2 LOW NO$_X$™ BURNER

1500-060 DIMENSIONS

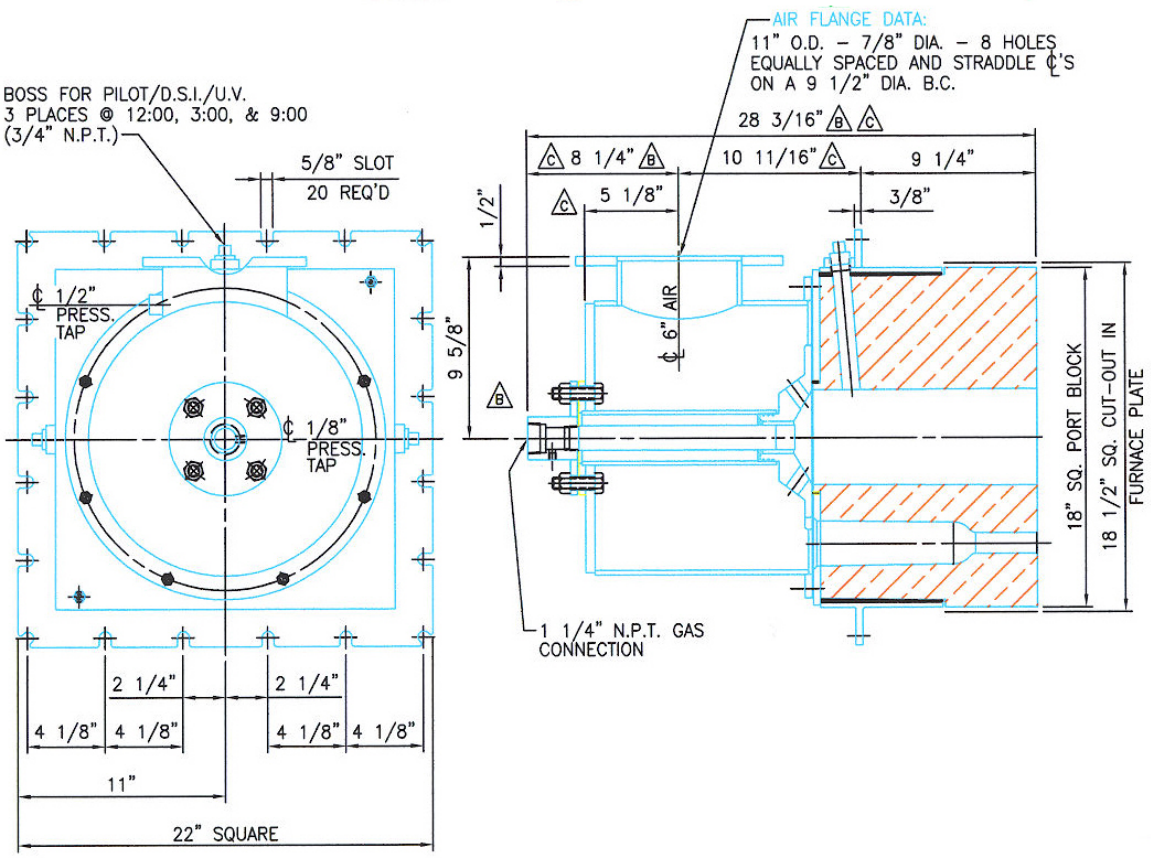

NOTE: GENERAL DIMENSION INFORMATION. SEE BLOOM REPRESENTATIVE FOR CERTIFIED DIMENSIONS FOR CONSTRUCTION.

CAUTION: The improper use of combustion equipment can result in a condition hazardous to people and property. Users are urged to comply with National Safety Standards and/or Insurance Underwriters recommendations

© Bloom Engineering Co 2009

1500 SERIES SMALL CAPACITY ULTRA^2 LOW NO_X™ BURNER

PARTS LIST

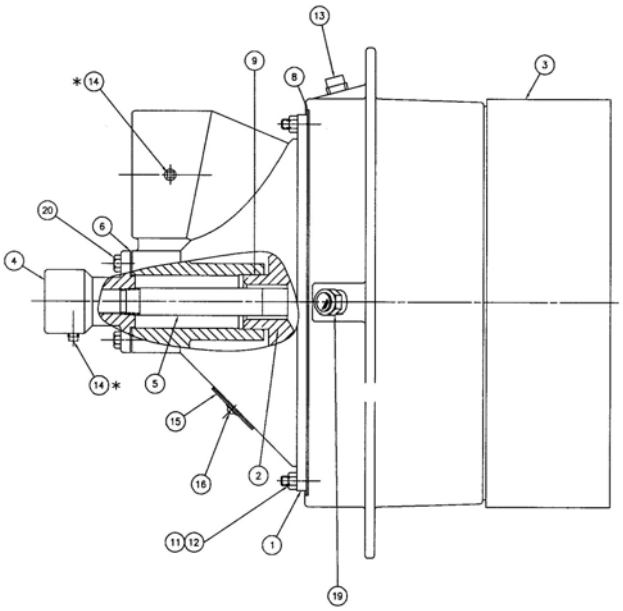

Number	No. Required	Description
1	1	Burner Body
2	1	Air Nozzle
3	1	Mounting Plate and Block Assembly
4	1	Gas Tee
5	1	Gas Lance
6	1	Gas Tee Gasket
7	1	Nozzle Gasket
8	1	Burner Body Gasket
9	-	Permatex Ultra Copper Sealant
10	6	½"-13 unc Hex Nut
11	8	3/8"-16 unc Hex Nut
12	8	3/8" S.A.E. Washer
13	2	¾" Pipe Plug
14	2	1/8" Pipe Plug
15	1	Nameplate ~ 2.00" dia.
16	1	#2 x .25" Long Round Head Drive Screw ~ Type "U"
19	1	¾" #9653-006 Observation Port
20	4	3/8"-16 unc x 1.00" Long Hex Head Capscrew

Part number must be preceded by catalog number.
Example:
To order Part 02 – Air Nozzle
Specify –
1500-020 - 02
(catalog number) (part number)

APPROXIMATE BURNER WEIGHTS

Catalog No. 1500-	lbs	kg
015	195	88.5
020	195	88.5
025	195	88.5
030	241	109.3
040	360	163.3
060	415	188.2

CAUTION: The improper use of combustion equipment can result in a condition hazardous to people and property. Users are urged to comply with National Safety Standards and/or Insurance Underwriters recommendations

© Bloom Engineering Co 2009