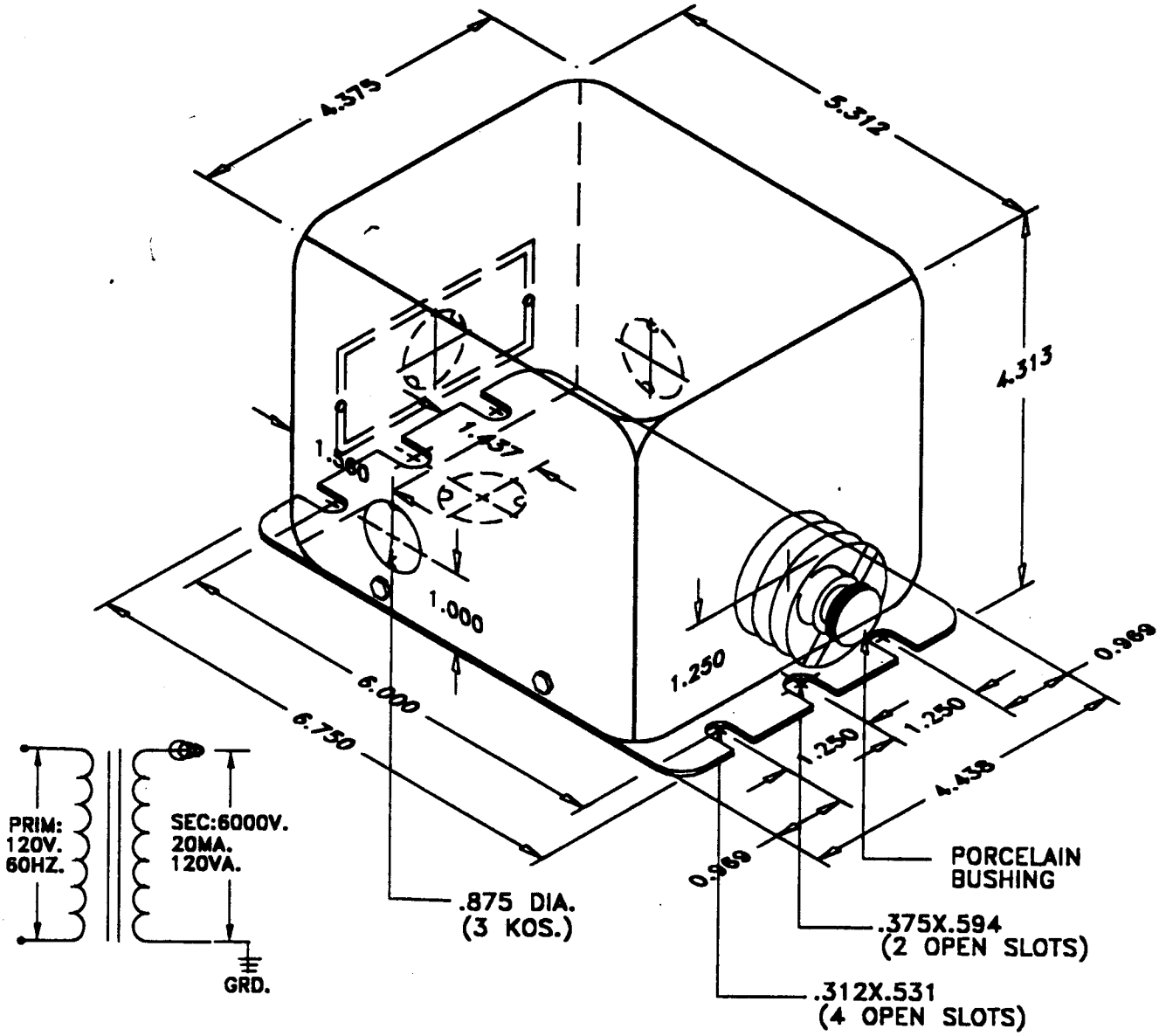

ELECTRICAL SPECIFICATIONS

STYLE: ENCLOSED, AIR COOLED, DRY TYPE, IGNITION TRANSFORMER
PRIMARY: 240V. 60HZ.
SECONDARY: 6000V. AT 20 MA. (CONTINUOUS) NOTE: START END OF SEC. GROUNDED
INSULATION SYSTEM: 105°C
TEMPERATURE RAISE: 55°C MAXIMUM
RATING: 120 VA.
MAXIMUM SECONDARY CURRENT: 24 MA. (SHORT CIRCUIT CURRENT)
MAXIMUM AMBIENT TEMPERATURE: 104°F (40°C)
APPROVAL: UL. LISTED FILE #E12339
CSA. CERTIFIED FILE #LR 560

REV: C	TITLE: OUTLINE FOR 6000 VOLTS 1PH. 60HZ.			
REV: B	IGNITION TRANSFORMER			
A DIM 4.313 WAS 4.75 & ADD 7/8 KO ON BACK SIDE MJ 9-14-99				
DONGAN ELECTRIC MFG. CO.	TOLERANCES DECIMAL DIMENSIONS ±.030 FRACTIONAL DIMENSIONS ±1/32	MADE BY M.JAFRI	DATE 1-6-97	CHECKED & APPROVED
PIONEER TRANSFORMER CO.	SCALE: 3D	PART NUMBER C06-SA6		DRAWING NUMBER 10-706