Specifications: Model 317F(60) Flanged Valve

Horizontal Flow

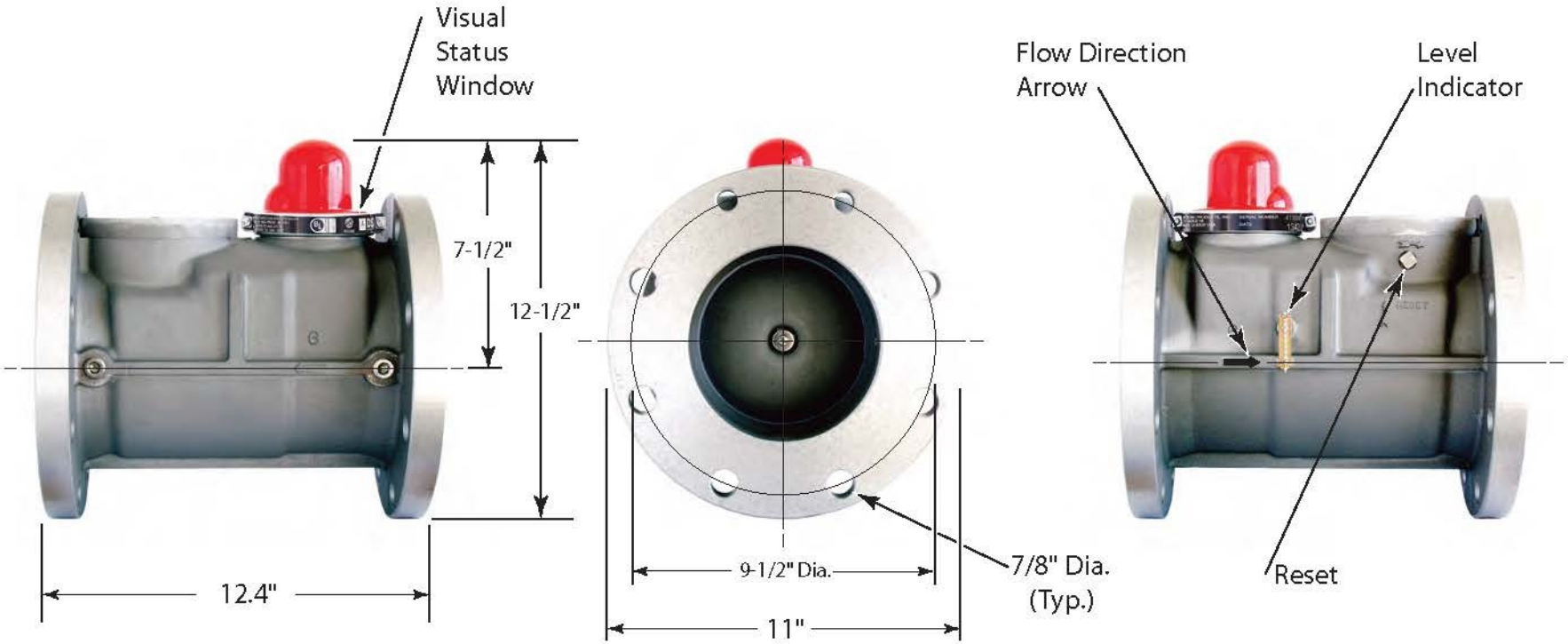

Valve Model#	CA-DSA No.	Length	Height	Diameter	Nominal Pipe Size	APPLICATION DATA		Diameter On Center	Diameter Hole (Typ.)	Number of Holes
						Max. Pressure	Fuel			
317F	13-16	12.4"	7-1/2"	11"	6"	60 psi	Dry Fuel Gas	9-1/2" Dia.	7/8" Dia.	8

Pacific Seismic Products

6" Model 317F California Seismic Valve
Flanged Horizontal

FLOW CAPACITY TABLE IWC/PSIG - Capacity S.C.F.H.
Merit Rating: Cv 1769
For determining approximate values at selected natural gas pressures to 60 PSIG

Pressure Drop									
PD iwc	8" iwc Inlet	14" iwc Inlet	PD psi	3 psi Inlet	5 psi Inlet	PD psi	20 psi Inlet	40 psi Inlet	60 psi Inlet
0.01	9,312	9,379	0.1	174,102	183,730	1	761,878	961,762	1,126,727
0.02	13,169	13,264	0.2	245,516	259,169	2	1,061,350	1,347,412	1,582,585
0.03	16,128	16,245	0.3	299,834	316,601	3	1,279,851	1,634,503	1,624,885
0.04	18,623	18,757	0.4	345,222	364,636	4	1,454,344	1,869,018	2,207,111
0.05	20,821	20,971	0.5	384,853	406,618	5	1,599,302	2,068,914	2,450,111
0.06	22,808	22,973	0.6	420,357	444,266	6	1,722,196	2,243,463	2,664,638
0.07	24,636	24,813	0.7	452,708	478,604	7	1,827,485	2,398,207	2,857,112
0.08	26,336	26,526	0.8	482,539	510,300	8	1,918,070	2,536,772	3,031,738
0.09	27,934	28,135	0.9	510,293	539,821	9	1,995,953	2,661,687	3,191,446
0.1	29,444	29,656	1.0	536,293	567,506	10	2,062,574	2,774,795	3,338,378
0.2	41,636	41,936	1.1	560,782	593,611	11	2,118,996	2,877,490	3,474,155
0.3	50,987	51,354	1.2	583,950	618,337	12	2,166,015	2,970,851	3,600,040
0.4	58,868	59,292	1.3	605,949	641,844	13		3,055,733	3,717,037
0.5	65,808	66,283	1.4	626,903	664,260	14		3,132,827	3,825,563
0.6		72,600	1.5	646,912	685,693	15		3,202,695	3,927,489
0.7		78,206	1.6	666,062	706,232	16		3,265,800	4,022,175
0.8		83,812	1.7	684,452	725,953	17		3,322,528	4,110,494
0.9		88,885	1.8	702,063	744,921	18		3,373,200	4,192,849
1.0		93,682	1.9	719,028	763,192	19		3,418,087	4,269,584
2.0		132,329	2.0	735,369	780,816	20		3,457,412	4,340,997
3.0		161,876	2.1		797,834	21		3,491,365	4,407,348
4.0		186,695	2.2		814,285	22		3,520,101	4,468,861
			2.3		830,203	23		3,543,746	4,525,734
			2.4		845,618	24		3,562,402	4,578,141
			2.5		860,557	25		3,576,147	4,626,232
			2.6		875,044				
			2.7		889,101				

Horizontal Valves

		Sizes Available														Ambient Temperature
		NPT								Flanged						CA DSA: -30°C (-22°F) to +70°C (158°F)
		3/4"	1"	1 1/4"	1 1/2"	2"	2 1/2"	3"	4"	2"	2 1/2"	3"	4"	6"	8"	
Maximum Pressures of Available Sizes	7 psi	✓	✓	✓	✓											Fluid
	60 psi	✓	✓	✓	✓	✓	✓	✓	✓	✓	✓	✓	✓	✓	✓	Natural gas LP gas